Your Expert Partner for **Human Machine Interfaces**

Actuator

84-1201.5

https://www.eao.com/component/84-1201.5/en/ac...

Your product:

84-1201.5
Actuator

FRONT

Front dimension:	Ø 25 mm
Front form:	Round
Front bezel colour:	Olive
Front bezel material:	Aluminium

MOUNTING

Design:	Flush
Mounting cut-out:	Ø 22.5 mm
Mounting type:	Panel mounting

OPERATING-/INDICATION PART

Lens illumination:	Illuminated

MECHANICAL CHARACTERISTICS

Switching action:	Momentary
Switching system:	Short-travel element
Mechanical lifetime:	≥1 Mil. cycles of operation
Operating force:	4.5 N ±1 N (measured at the lens)
Operating Travel:	1.2 mm
Tightening torque:	Fixing nut 0.8 Nm
Weight:	0.012 kg

AMBIENT CONDITION

IP front protection:	IP65, IP67
IP Protection:	IP65, IP67
Operating temperature:	– 25 °C … + 70 °C
Storage temperature:	– 40 °C … + 85 °C
Climate resistance:	Damp heat, cyclic: 96 hours, + 25 °C/97 %, + 55 °C/93 % relative humidity, as per EN IEC 60068-2-30 Damp heat, steady: 56 days, + 40 °C/93 % relative humidity, according to EN IEC 60068-2-78 Rapid change of temperature: 100 cycles, – 40 °C … + 80 °C, as per EN / IEC 60068-2-14

CERTIFICATE

Approbations:	TSI PRM (EBC), NFF
Conformities:	CE, UKCA, 2011 / 65 / EC (RoHS)
REACH:	REACH compliant
RoHS:	RoHS compliant

OTHER

Short Description:	Actuator, Ø 22.5 mm, Ø 25 mm, Illuminated, Round, Olive, Aluminium, anodised, Momentary, IP65, IP67
Dimension:	Ø 25 mm
Housing colour:	Olive green
Housing material:	Aluminium
Description component:	Material housing actuator: Plastic as per UL94 V0
Wiring diagrams:	

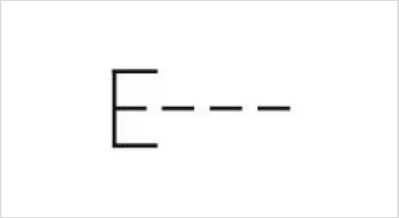

Mounting cut-outs:

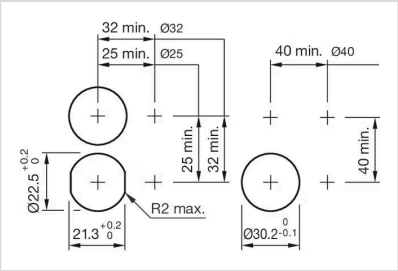

Dimension drawings:

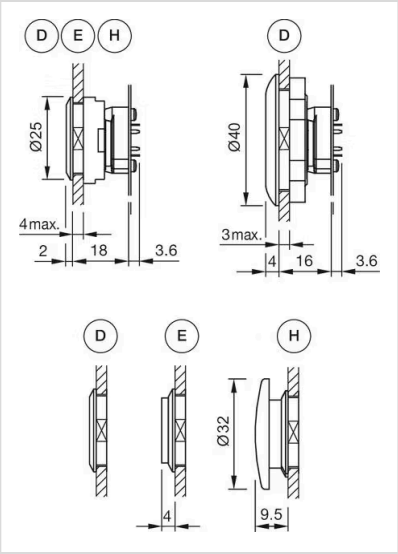

A = Lens level with bezel
E = Lens raised above bezel
H = Mushroom-head cap

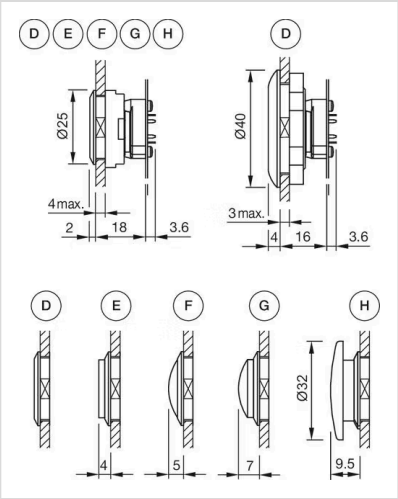

D = Lens level with bezel
E = Lens raised above bezel
F = Lens konvexe level with bezel
G = Lens convexe raised above bezel
H = Mushroom-head cap

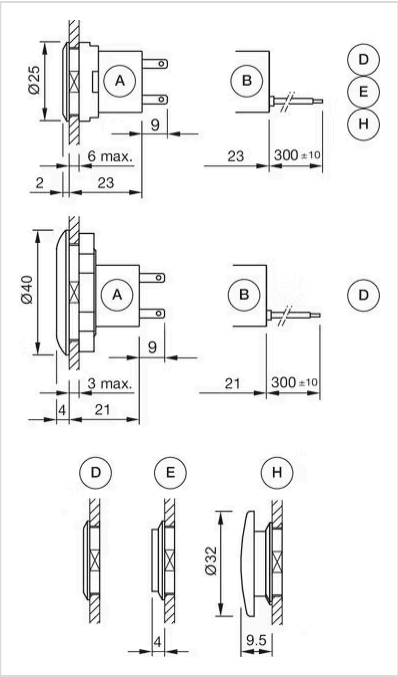

A = Plug-in terminal 2.8 mm x 0.8 mm
B = Flat ribbon cable
D = Lens level with bezel
E = Lens raised above bezel
H = Mushroom-head cap

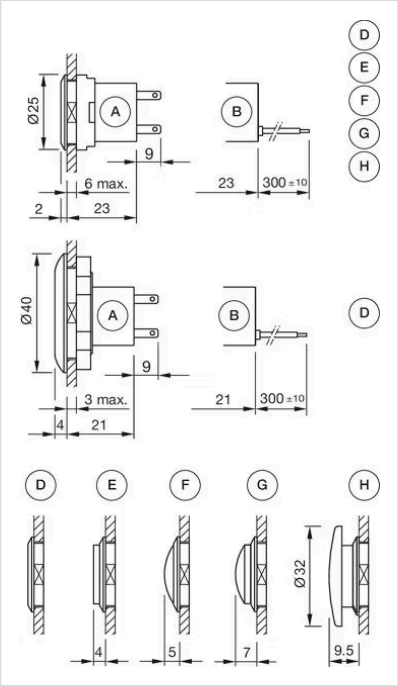

A = Plug-in terminal 2.8 mm x 0.5 mm
B = Flat ribbon cable
D = Lens level with bezel
E = Lens raised above bezel
F = Lens konvexe level with bezel
G =Lens convexe raised above bezel
H = Mushroom-head cap