Your Expert Partner for **Human Machine Interfaces**

Indicator

17-010351

https://www.eao.com/component/17-010351/en/in...

Your product:

17-010351
Indicator

FRONT

Front dimension:	Ø 9,5 mm
Front form:	Round
Reflector:	Metal, polished chromium-plated, flat top LED

MOUNTING

Design:	Raised
Mounting cut-out:	Ø 8 mm
Mounting type:	Panel mounting

OPERATING-/INDICATION PART

Lens:	flush
Illumination colour:	Green

ELECTRICAL CHARACTERISTICS

Operating voltage:	24 V AC ±10 %
Operation current:	20 mA ±15 %
Lumi. Intensity:	8 mcd
Polarity:	Anode (+) Brass plug-in connector Cathode (-) Brass tinned plug-in connector

MECHANICAL CHARACTERISTICS

Terminal:	Plug-in terminal, 2.8 x 0.8 mm
Tightening torque:	Fixing nut max. 0.2 Nm

Weight: 0.005 kg

AMBIENT CONDITION

IP Protection: IP40 front side, IP65 front side, according to IEC 60529

Operating temperature: – 20 °C ... + 60 °C

Storage temperature: – 25 °C ... + 80 °C

CERTIFICATE

Approbations: UL

Conformities: 2011 / 65 / EC (RoHS), 2014 / 35 / EU (230 VAC)

REACH: REACH compliant

RoHS: RoHS compliant

OTHER

Short Description: Indicator, Ø 8 mm, Ø 9,5 mm, Round, Plug-in terminal, 2.8 x 0.8 mm, Green

Kind of illlumination: Single-LED

Hints: Connectors: Brass terminal = anode (+); brass tinned terminal = cathode (-)
IP67 front side gap between LED and reflector and gap between reflector and frontplate sealed to IP67 when using the supplied gasket.
The plastic is limited resistant to chemicals.

Wiring diagrams:

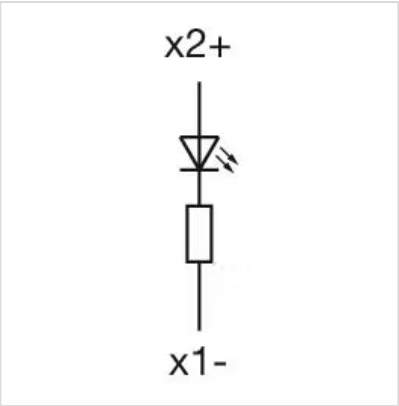

Mounting cut-outs:

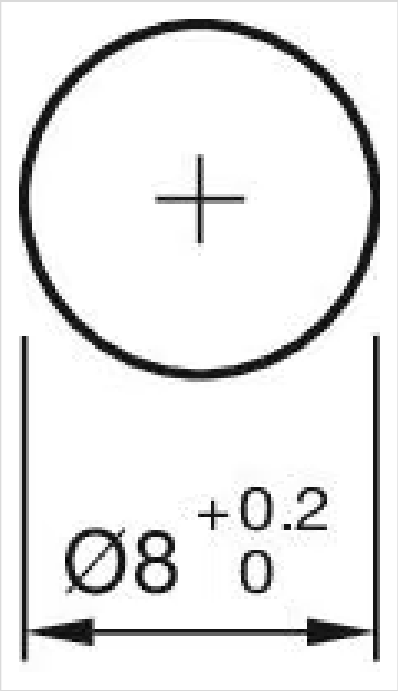

Dimension drawings:

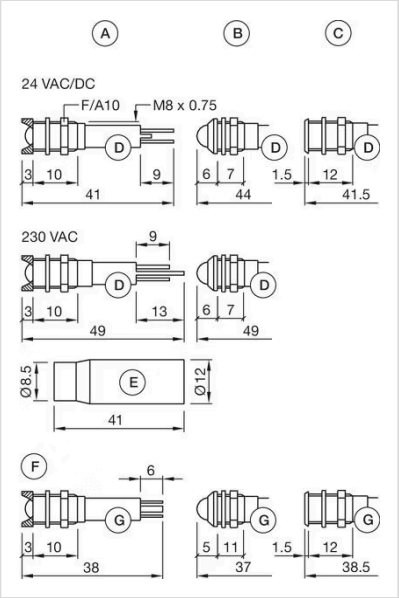

A = interior
B = exterior
C = superflat
D = Plug-in terminal 2.8 mm x 0.8 mm
E = Multi-colour
F = Protection tube
G = Plug-in terminal 2.0 mm x 0.5 mm