Your Expert Partner for **Human Machine Interfaces**

Capacitive sensor switch with IO-Link Hygiene

84-ACKS-C19-04C6

https://www.eao.com/component/84-ACKS-C19-04C...

Your product:

84-ACKS-C19-04C6
Capacitive sensor switch with IO-Link Hygiene

FRONT

Front dimension:	Ø 30 mm
Front form:	Round
Front bezel material:	Stainless steel 316L

MOUNTING

Design:	Flush
Mounting cut-out:	Ø 22.5 mm
Mounting type:	Panel mounting

OPERATING-/INDICATION PART

Lens material:	Plastic
Lens illumination:	Illuminated
Lens shape:	Flush
Lens optics:	transparent
Symbol:	RESET (C19)

ELECTRICAL CHARACTERISTICS

Operating voltage:	8.4 - 32 V DC
Communication interface:	IO-Link specification

MECHANICAL CHARACTERISTICS

Terminal:	Connector M12

Switching system:	Capacitive
Operating force:	No actuating force necessary
Weight:	0.015 kg

AMBIENT CONDITION

IP front protection:	IP69K
IK front protection:	IK08
Operating temperature:	– 30 °C ... + 65 °C
Climate resistance:	Relative humidity, max. 95%, non-condensing

CERTIFICATE

Approbations:	CSA, EHEDG
Conformities:	CE, UKCA
REACH:	REACH compliant
RoHS:	RoHS compliant

OTHER

Short Description:	Capacitive sensor switch with IO-Link Hygiene, Ø 22.5 mm, Ø 30 mm, Flush, Illuminated, Plastic, transparent, Round, Stainless steel 316L, Connector M12, IP69K, IK08, RESET (C19)
Housing colour:	Black
Housing material:	Plastic
Wiring diagrams:	

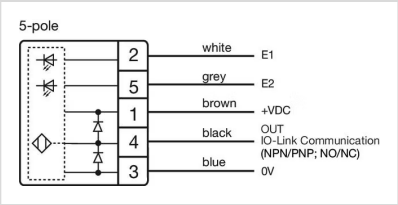

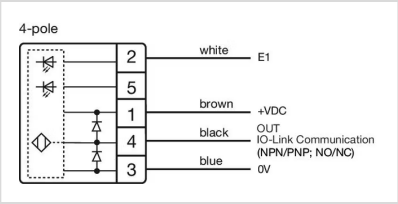

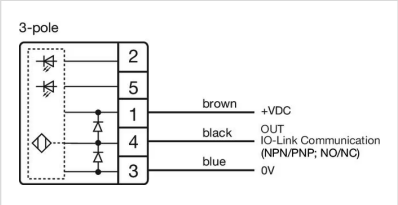

Component layouts:

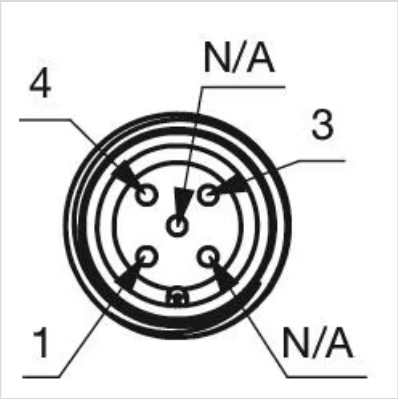

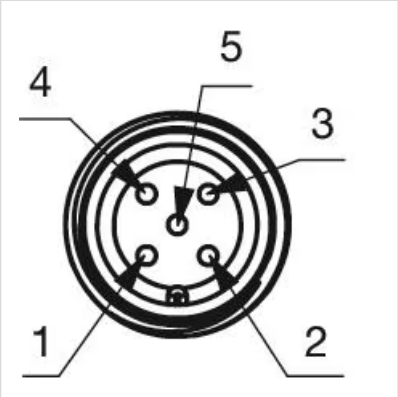

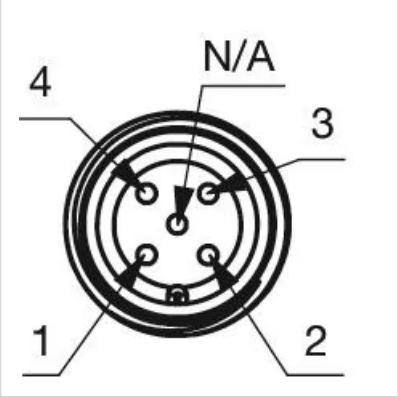

Mounting cut-outs:

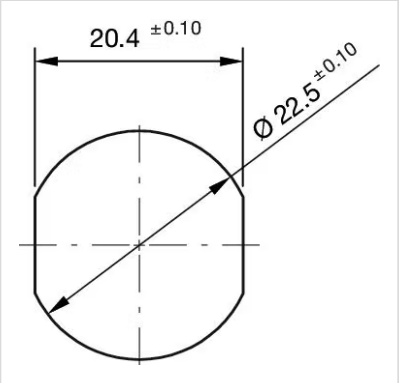

Dimension drawings:

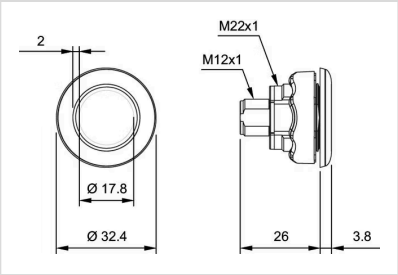
2
M22x1
M12x1
Ø 17.8
Ø 32.4
26
3.8