Your Expert Partner for **Human Machine Interfaces**

Actuator

51-
371.F22D

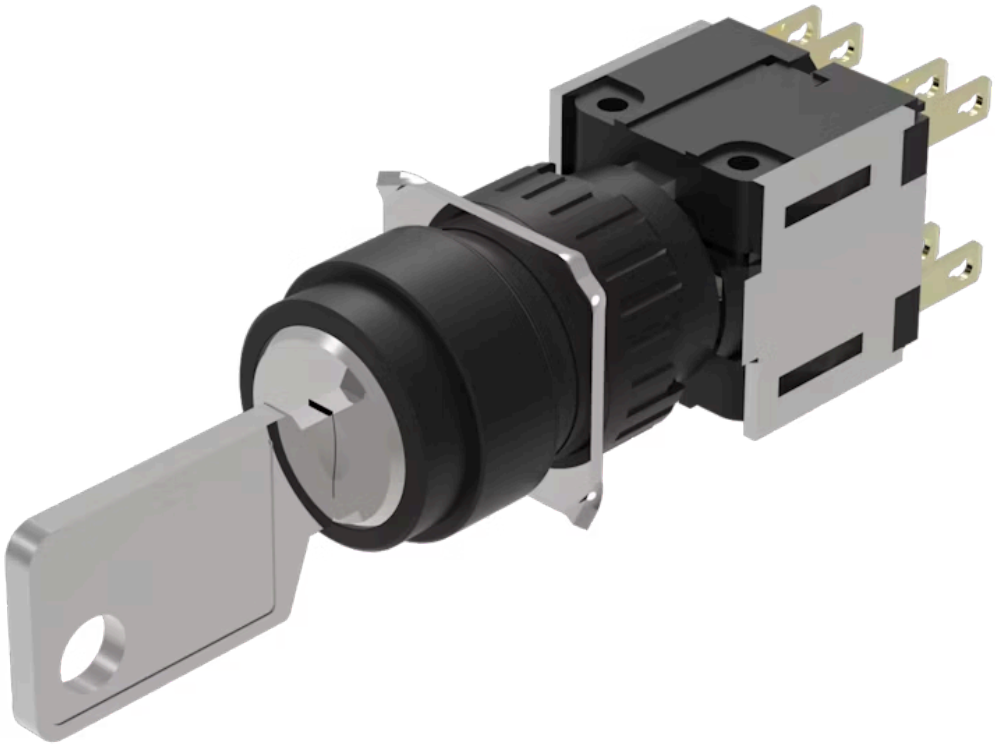

https://www.eao.com/component/51-371.F22D/en/...

Your product:

51-371.F22D
Actuator

FRONT

Front dimension:	Ø 18 mm
Front form:	Round

MOUNTING

Design:	Raised
Mounting type:	Panel mounting

ELECTRICAL CHARACTERISTICS

Switching voltage and switching current:	250 VAC, 5 A (cosφ 0.75)
Contacts:	2 NC / 2 NO
Switching rating:	250 V @ 5 A
Electric strength:	2500 VAC, 50 Hz, 1 min. between all terminals and earth, according to IEC 61058-1, part 15
Electrostatic discharge (ESD):	≤ 15 KV
Protection class:	II
Thermal current Ith:	5 A, according to EN / IEC 60947-5-1

MECHANICAL CHARACTERISTICS

Terminal:	Plug-in terminal, 2.8 x 0.5 mm
Contact material:	Gold
Switching action:	Maintained - Rest (a) - Maintained
Switching system:	Snap-action switching element
Switching system:	

Self-cleaning, double-break snap action switching system, 2 normally closed and 2 normally open contact per element.

Switching positions:	3 positions
Switching angle:	90° left / 90° right
Mechanical lifetime:	50 000 cycles of operation
Tightening torque:	Fixing nut max. 0.5 Nm
Wire cross section:	Max. wire cross-section 2 wires with 1 mm Max. wire cross-section of stranded cable 2 x 0.75 mm^2
Weight:	0.022 kg

AMBIENT CONDITION

IP front protection:	IP65, according to DIN EN 60529
Operating temperature:	– 25 °C ... + 55 °C
Storage temperature:	– 40 °C ... + 85 °C

CERTIFICATE

Approbations:	CB (IEC 61058-1), CQC, CSA, DNV, ENEC (EN 61058-1), UL
REACH:	REACH compliant
RoHS:	RoHS compliant

OTHER

Short Description:	Actuator, Ø 18 mm, Round, 2 NC / 2 NO, Maintained - Rest (a) - Maintained, Plug-in terminal, 2.8 x 0.5 mm, IP65, according to DIN EN 60529
Hints:	Standard lock: DOM 311

Switching positions:

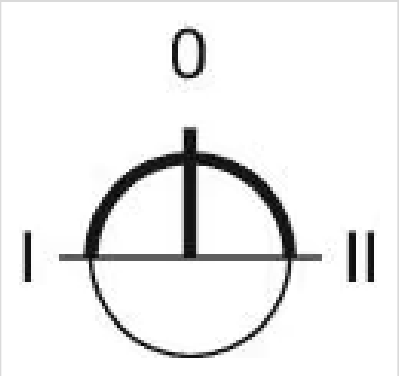

Wiring diagrams:

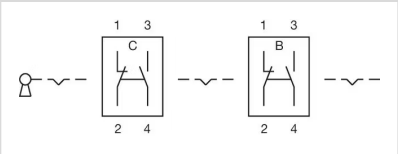

Mounting cut-outs:

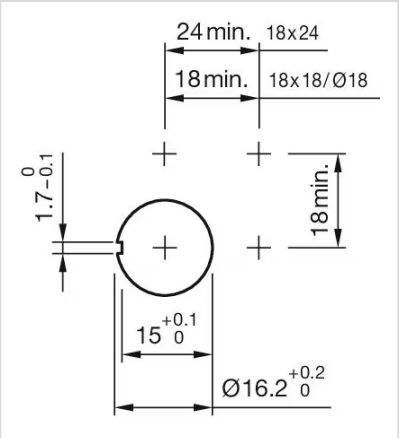
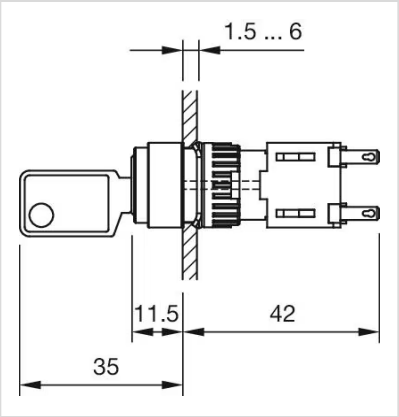
Dimension drawings: