Your Expert Partner for **Human Machine Interfaces**

Actuator

45-
2134.4F20.000

https://www.eao.com/component/45-2134.4F20.00...

Your product:

45-2134.4F20.000
Actuator

FRONT

Front dimension:	Ø 38 mm
Front form:	Round
Front bezel colour:	Sand grey
Front bezel material:	Metal

MOUNTING

Design:	Flush
Mounting cut-out:	Ø 30.5 mm
Mounting type:	Panel mounting

OPERATING-/INDICATION PART

Lens colour:	Red
Lens material:	Plastic
Lens illumination:	Non illuminated
Lens shape:	Flush
Lens optics:	opaque

MECHANICAL CHARACTERISTICS

Switching action:	Maintained
Switching system:	Slow-make switching element
Mechanical lifetime:	10 Mil. cycles of operation
Operating frequency:	Max. 1 800/h

Weight:	0.073 kg

AMBIENT CONDITION

IP front protection:	IP66, IP67, IP69K
Operating temperature:	– 25 °C ... + 70 °C
Storage temperature:	– 40 °C ... + 80 °C
Shock resistance:	According to IEC 60068-2-27: Sinusoidal half-wave 50 g / 11 ms
Vibration resistance:	According to IEC 60068-2-6: 20 ... 500 Hz: 5 g
Climate resistance:	During operation according to IEC 60721: 3K6, 3C3, 3S2, 3M6

CERTIFICATE

REACH:	REACH compliant
RoHS:	RoHS compliant

OTHER

Short Description:	Actuator, Ø 30.5 mm, Ø 38 mm, Flush, Non illuminated, Red, Plastic, opaque, Round, Sand grey, Metal, Maintained, IP66, IP67, IP69K
Housing colour:	Silver
Housing material:	Metal
Hints:	Push to unlatch
Wiring diagrams:	

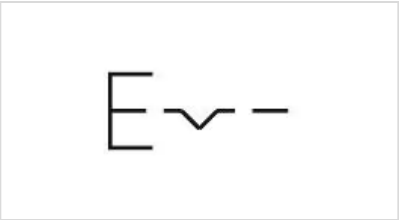

Dimension drawings:

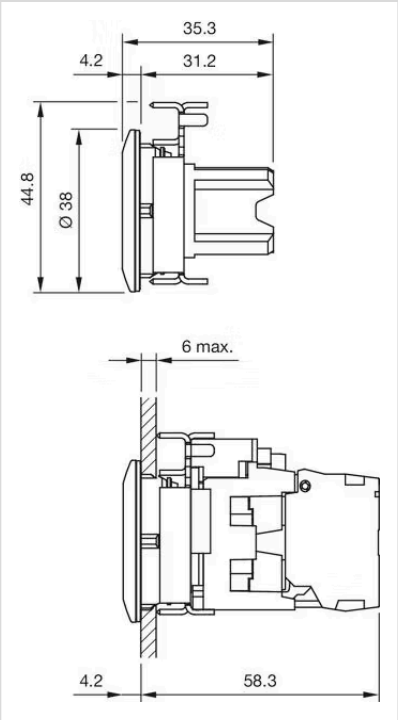
35.3
4.2
31.2
44.8
Ø 38
6 max.
4.2
58.3