Your Expert Partner for **Human Machine Interfaces**

Indicator

17-
371350Z

https://www.eao.com/component/17-371350Z/en/i...

Your product:

17-371350Z
Indicator

FRONT

Front dimension:	Ø 18,3 mm
Front form:	Round
Reflector:	Plastic, Black

MOUNTING

Design:	Raised
Mounting cut-out:	Ø 16.2 mm
Mounting type:	Panel mounting

OPERATING-/INDICATION PART

Lens:	flush
Illumination colour:	Red

ELECTRICAL CHARACTERISTICS

Operating voltage:	24 V DC ±10 %
Operation current:	16 mA ±15 %
Lumi. Intensity:	1200 mcd
Polarity:	Anode (+) Brass plug-in connector Cathode (-) Brass tinned plug-in connector

MECHANICAL CHARACTERISTICS

Terminal:	Plug-in terminal, 2.8 x 0.8 mm
Tightening torque:	Fixing nut max. 0.2 Nm

Weight: 0.007 kg

AMBIENT CONDITION

IP Protection: IP40 front side, IP65 front side, according to IEC 60529

Operating temperature: – 20 °C ... + 60 °C

Storage temperature: – 25 °C ... + 80 °C

CERTIFICATE

Approbations: UL

Conformities: 2011 / 65 / EC (RoHS), 2014 / 35 / EU (230 VAC)

REACH: REACH compliant

RoHS: RoHS compliant

OTHER

Short Description: Indicator, Ø 16.2 mm, Ø 18,3 mm, Round, Plug-in terminal, 2.8 x 0.8 mm, Red

Kind of illlumination: Single-LED

Hints: Connectors: Brass terminal = anode (+); brass tinned terminal = cathode (-)
IP67 front side gap between LED and reflector and gap between reflector and frontplate sealed to IP67 when using the supplied gasket.
The plastic is limited resistant to chemicals.

Wiring diagrams:

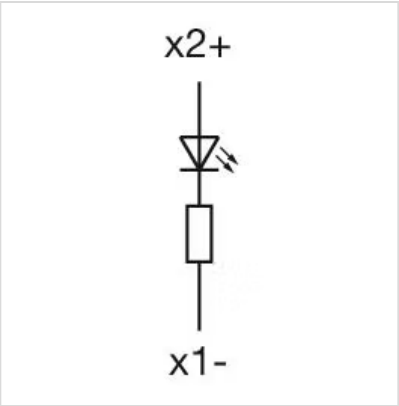

Mounting cut-outs:

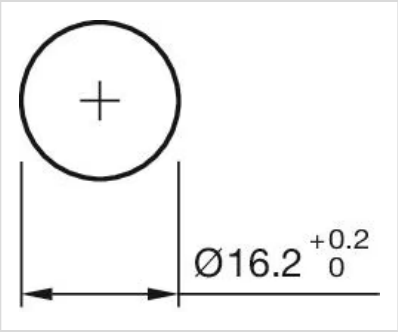

Dimension drawings:

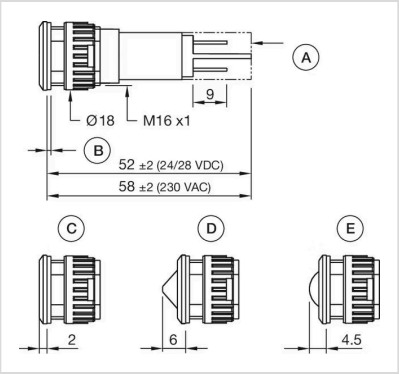

A = Protection tube (only 230 VAC)
B = 1 gasket
C = flat
conical
D = round