Your Expert Partner for **Human Machine Interfaces**

Actuator

31-
702.006

https://www.eao.com/component/31-702.006/en/a...

Your product:

31-702.006
Actuator

PRODUCT RANGE

Product Status:	Not Recommended for new design

FRONT

Front dimension:	24 mm x 18 mm
Front form:	Rectangular
Front bezel colour:	Black
Front bezel material:	Plastic

MOUNTING

Design:	Raised
Mounting cut-out:	Ø 16 mm
Mounting type:	Panel mounting

MECHANICAL CHARACTERISTICS

Terminal:	Universal terminal, 2 x 0.5 mm
Weight:	0.007 kg

CERTIFICATE

REACH:	REACH compliant
RoHS:	RoHS compliant

OTHER

Short Description: Actuator, Ø 16 mm, 24 mm x 18 mm, Rectangular, Black, Plastic, Universal terminal, 2 x 0.5 mm

Internal size: 21,5 mm x 15,3 mm

Housing colour: Black

Housing material: Plastic

Wiring diagrams:

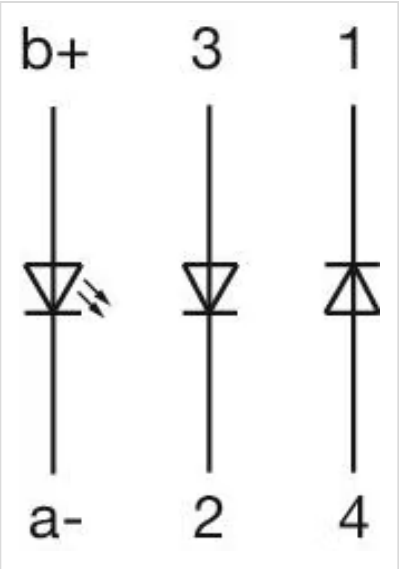

Mounting cut-outs:

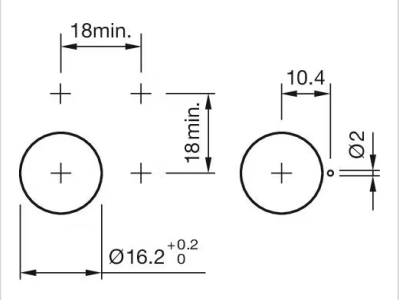

Dimension drawings:

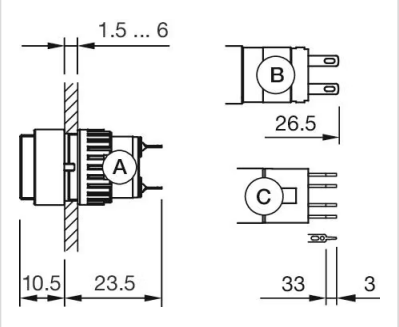

A = Solder terminal
B = Plug-in terminal 2.8 mm x 0.5 mm
C = Universal terminal 2.0 mm x 0.5 mm