Your Expert Partner for **Human Machine Interfaces**

Actuator

71-612.0

https://www.eao.com/component/71-612.0/en/act...

Your product:

71-612.0
Actuator

MOUNTING

Mounting type: Panel mounting

OPERATING-/INDICATION PART

Lens illumination: Illuminated

ELECTRICAL CHARACTERISTICS

Switching voltage and switching current:

Switch rating AC cosφ 0,7 … 0,8 gemäss EN IEC 60947-5-1		
Voltage	250 VAC	
Current	3 A	
Switch rating DC gemäss EN IEC 60947-5-1		
Voltage	24 VDC	250 VDC
Current	3 A	0.5 A

Surge voltage resistance: 2500 VAC, 50 Hz, 1 minute, as per DIN / IEC 60512-2 between all terminals and earth

Recommended minimum operational data:

Voltage	5 VAC/DC
Current	10 mA

MECHANICAL CHARACTERISTICS

Switching action:	Maintained
Switching system:	Self-cleaning, double-break snap action switching system, 1 normally closed and 1 normally open contact per element.
Mechanical lifetime:	1 Mil. cycles of operation
Operating force:	3 N ... 7 N
Operating Travel:	ca. 3 mm
Tightening torque:	Fixing nut max. 0.5 Nm
Weight:	0.005 kg

AMBIENT CONDITION

IP Protection:	IP65 front side
Operating temperature:	– 25 °C ... + 55 °C
Storage temperature:	– 40 °C ... + 85 °C
Shock resistance:	Max. 500 m/s^2, pulse width, 3-axis (sinusoidal EN IEC 60068-2-27)
Vibration resistance:	Max. 100 m / s^2 from 10 Hz ... 500 Hz, (sinusoidal EN IEC 60068-2-6)
Climate resistance:	Damp heat, steady: 56 days, + 40 °C/93 % relative humidity, according to EN IEC 60068-2-78

CERTIFICATE

Conformities:	CE, UKCA, 2011 / 65 / EC (RoHS), 2014 / 35 / EU (LVD)
REACH:	REACH compliant
RoHS:	RoHS compliant

OTHER

Short Description:	Actuator, Illuminated, Maintained
Housing colour:	Black
Housing material:	Plastic, according to UL 94 V0
Product attributes:	Pitch of the front plate mounting holes must agree with the printed circuit board holes Ø 3.5 mm
Hints:	Pitch of the front plate mounting holes must agree with the printed circuit board holes Ø 3.5 mm
Wiring diagrams:	

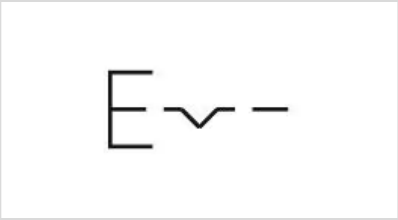

Mounting cut-outs:

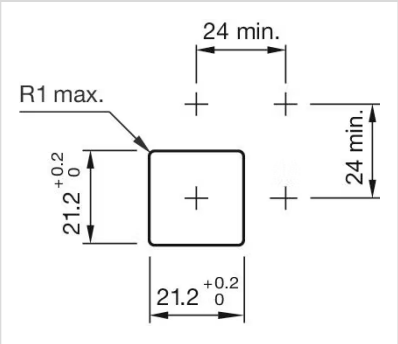
24 min.
R1 max.
24 min.
21.2 +0.2 0
21.2 +0.2 0

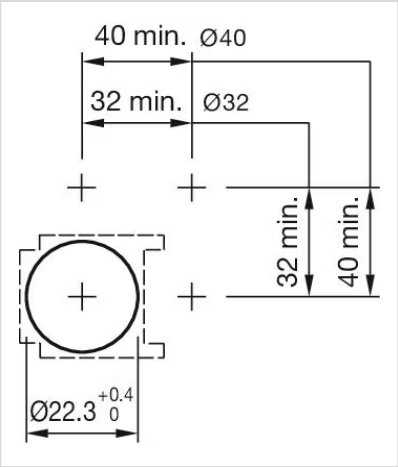
40 min. Ø40
32 min. Ø32
32 min.
40 min.
Ø22.3 +0.4 0

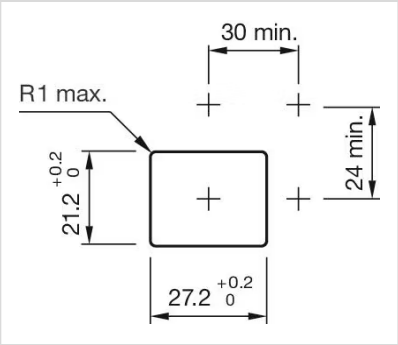
30 min.
R1 max.
24 min.
21.2 +0.2 0
27.2 +0.2 0

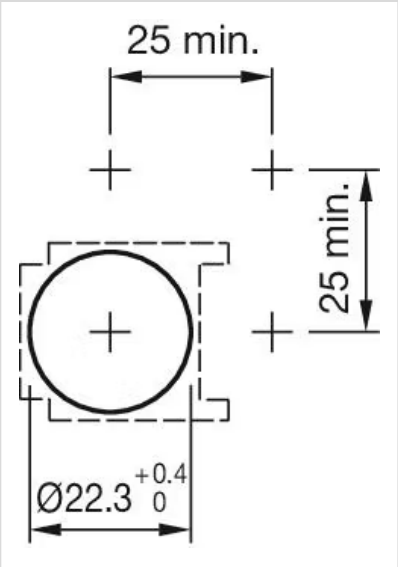
25 min.
25 min.
Ø22.3 +0.4 0
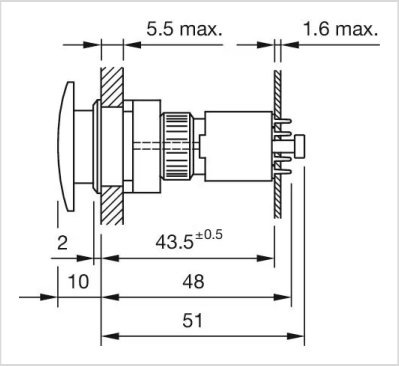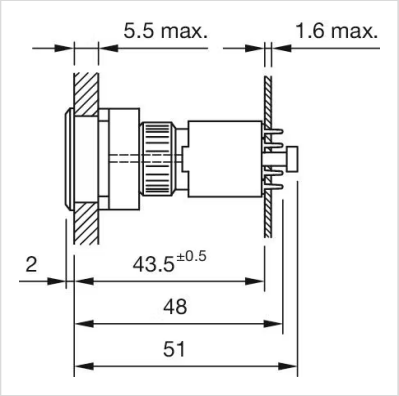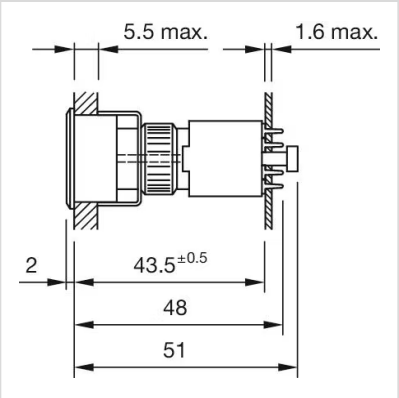
Dimension drawings: